CV-2C 230V
CV-1C 120V
CV-9C 100V

PNEUMATIC DESOLDERING STATION

SPARE PARTS	
CSV-2C / CSV-1C / CSV-9C:	
-FRONT CIRCUIT	0011908
-ENCLOSURE	0004165
MV-A:	
-CIRCUIT	0006811
-ENCLOSURES:	
· TOP	0008843
· BOTTOM	0008844
· FRONT	0008835
· BACK	0008845
-SELENOID VALVE	0006813
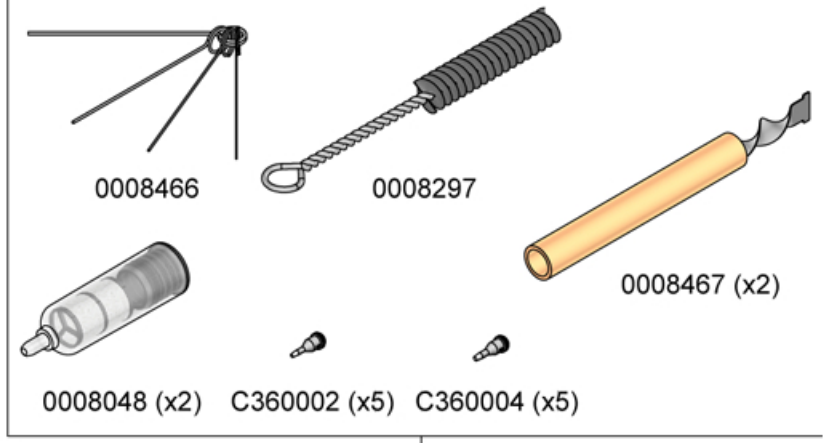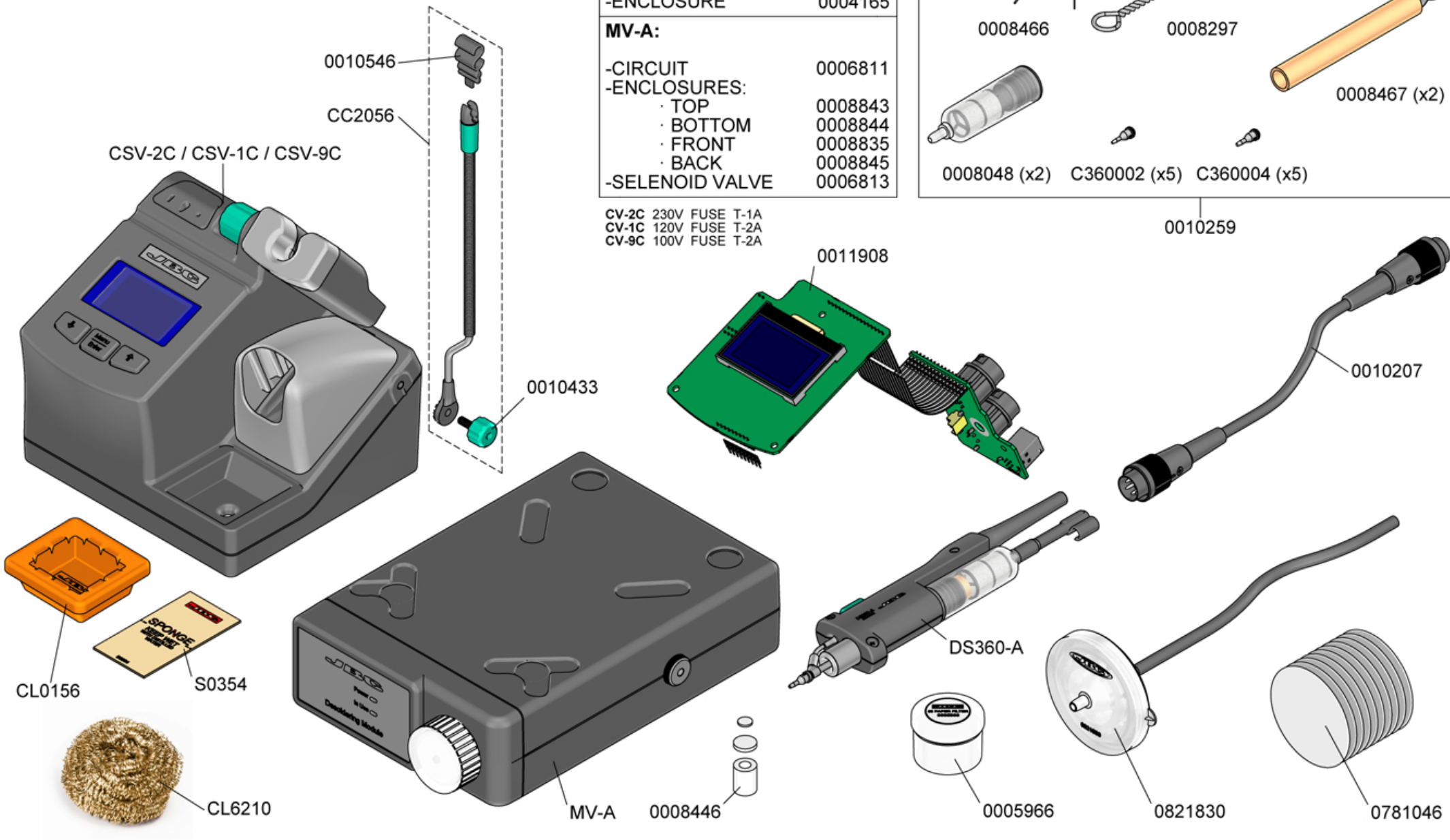
CV-2C 230V FUSE T-1A
CV-1C 120V FUSE T-2A
CV-9C 100V FUSE T-2A